NOTES:

1. MATERIAL: FIBERGLASS REINFORCED POLYMER (FRP)
2. WEIGHT: COLUMN: 112 Lbs.
   CAP: 12 Lbs.
   BASE: 16.5 Lbs.
3. MATERIAL THICKNESS.
   COLUMN: 3/8"
4. INSIDE DIAMETER AT TOP OF COLUMN: 10 7/8"
5. OUTSIDE DIAMETER AT TOP OF COLUMN: 11 5/8"
6. INSIDE DIAMETER AT BOTTOM OF COLUMN: 10 7/8"
7. OUTSIDE DIAMETER AT BOTTOM OF COLUMN: 11 5/8"
8. MAXIMUM LOAD BEARING WEIGHT: 18000 Lbs.

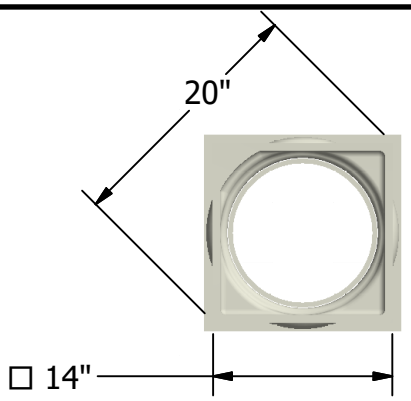

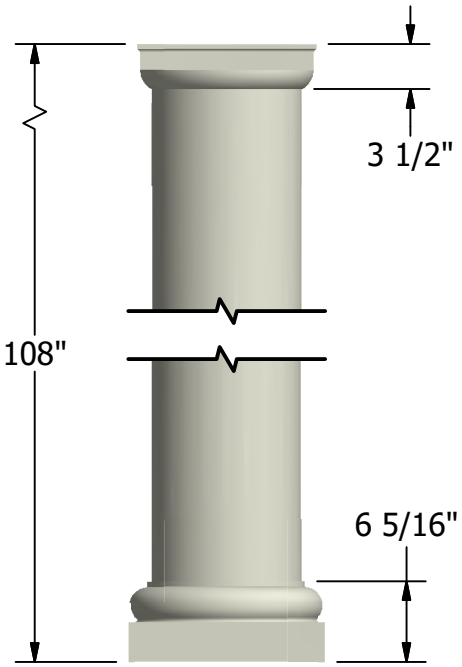

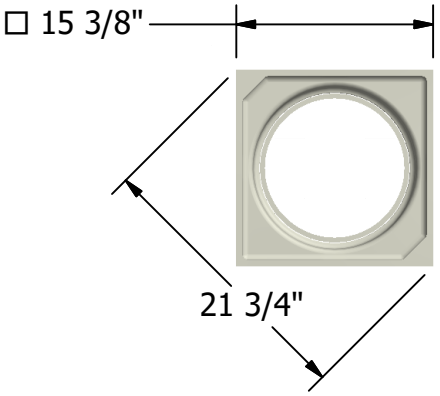

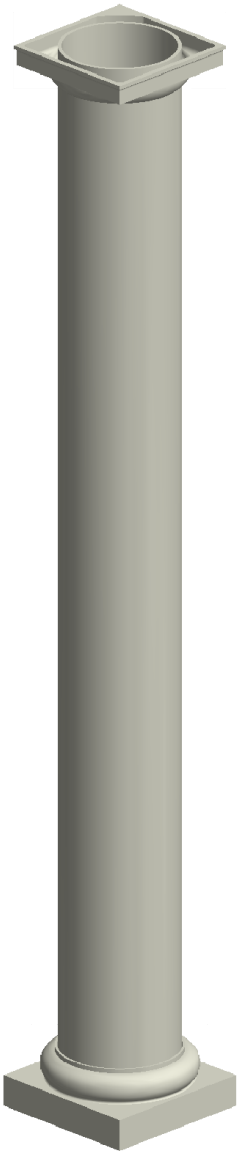

NOT TO SCALE

DRAWN Bryan Daniels	5/13/2016
CHECKED	
QA	

DIMENSIONS ARE IN INCHES

TOLERANCE: ± 1/4"

FIRST CLASS BUILDING PRODUCTS, INC.

TITLE
Tuscan Round, Non-Tapered
12" x 9'

SIZE	DWG NO	REV
A	NTSM1209	03

SCALE 1:15

SHEET 1 OF 1

First Class Building Products, Inc.
3600 Dallas Highway Suite 230-387
Marietta, GA 30064
Tel: 770-514-8141
Email: firstclassbp@gmail.com
www.firstclassbp.com